MB90

Moisture Analyzer

Combining Speed and Precision in One Moisture Analyzer –Test More Samples in Less Time

Measuring moisture content has never been easier than with the MB90 Moisture Analyzer. The MB90's halogen heating distributes heat uniformly over the sample and speeds up the drying process—delivering fast and precise measurements. Designed for tool-free cleaning, the MB90's components can be easily removed for quick and easy maintenance. Operating the MB90 is intuitive with the icon-driven menu navigation on the touchscreen display.

Standard Features Include:

- **Outstanding Halogen Heating Guarantees Fast and Precise Results**
  The MB90's precisely controlled halogen heating dries samples quickly and ensures uniform heating to yield fast, precise and repeatable results of 0.01% readability.
- **Effortless Maintenance with the Tool-Free Cleaning Design**
  Designed with effortless maintenance in mind, the MB90 features a removable pan handler and heating chamber components that make cleaning quick and easy—no tools needed.
- **Touchscreen Icon-Based Menu Navigation Guides Users Through Every Step**
  Icon-based menu navigation on the easy-to-read touchscreen display makes operating the MB90 intuitive. Perform routine sample testing in three easy steps—no training required.

MB90 Moisture Analyzer

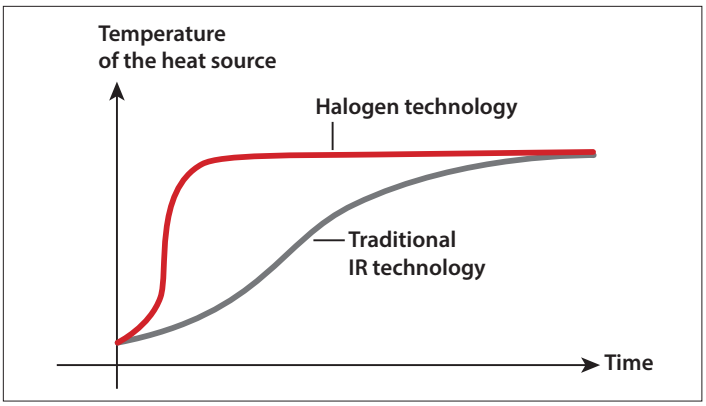

Fast Heating Time

Uniform Drying

Exceptional Precision

The MB90 provides precise results for more confident testing.

- **Fast Halogen Heating Technology**
  Halogen heating dries samples in seconds and performs up to 40% faster than traditional infrared methods.
- **Uniform Drying for Precise, Repeatable Results**
  The reflective sample chamber ensures uniform heating of each sample to yield reliable results of 0.01% readability.
- **Flexible and Powerful**
  Features a full operating temperature range of 40–200 °C in 1 degree increments.
- **Two Drying Profiles to Ensure Accuracy**
  Customize heating of specific samples with temperature control for one-step drying—set temperature and time and begin!

  Fast: Quickest possible time to temperature

  Standard: Minimal overshoot while achieving temperatures quickly
- **Shut-Off Criteria for Automatic Test Completion**
  Customize your own test endpoint criteria to automatically end the test once moisture loss is no longer detected. Choose from 3 criteria—Manual, Timed and Auto.

Easy Tool-Free Cleaning

The MB90 features a patented pan handler and removable parts for convenient maintenance.

- **Stainless Steel Drying Pan**
  Wipe down quickly
- **Removable Heating Chamber Components**
  No tools required—simply remove glass and tray to clean

Testing Made Simple

The MB90 features a wide, bright touchscreen display and intuitive menu navigation for fast, accurate moisture analysis.

- **Touchscreen Display**
  Easy to read and understand
- **Icon-Driven Menu Navigation**
  Easy to follow—no training required
- **4 Mechanical Keys for Fast One-Step Operation**
  Tare, Start/Stop, Print, On/Off
- **USB and RS232 Ports**
  Quick connections to a PC or flash drive
- **Moisture Analysis Made Simple**
  Just 3 easy steps for routine sample testing!

  1. Tare empty sample pan

  2. Add sample according to best practices

  3. Press start and see your results!

Multiple Ways to Connect

Versatile connectivity options to handle data collection and transfer needs—enhancing the user experience.

- **USB and RS232 Ports**
  Quick connections to a PC or flash drive
- **Data Collection and Transfer**
  You can simply save and transfer data from the moisture analyzer to a USB drive

MB90 *Moisture Analyzer*

Model	MB90
Capacity	90 g
Readability	0.01%/0.001 g
Repeatability (Std Dev) (g)	0.18% (3 g sample) 0.02% (10 g sample)
Moisture Range	0.01% to 100% (0.01% to 1000% for regain mode)
Output	RS232, USB Host, USB Device
Heating Element	Halogen
Temperature Range	40–200 °C
Power	120 or 240 VAC 50/60 Hz
Operating Temperature Range	50–104 °F/10–40 °C
Display Type	4.3 in/109 mm, QVGA, TFT touch screen
Display Results	%moisture, %solids, %regain, time, temperature, weight, method name, drying curve and statistics
Pan Size	3.5 in/90 mm
Dimensions (W × H × D)	8.3 × 7.7 × 14.0 in/211 × 180 × 355 mm
Net Weight	11.5 lb/5.23 kg
Shipping Weight	18.4 lb/8.35 kg

Compliance

- **Product Safety:** IEC/EN 61010-1; IEC/EN 61010-2-010; CAN/CSA C22.2 61010-1; CAN/CSA C22.2 61010-2-010; UL 61010-1
- **Electromagnetic Compatibility:** IEC/EN 61326-1 Class B, Basic environments; FCC Part 15 Class A; ICES-003 Class A

Additional Features

ABS top housing, stainless steel pan support, in-use cover, storage up to 2 methods and 100 test results for each method, user-guide, 13 operational languages

Accessories

Pan Handler 30246947
In-Use-Cover 30284478
Scoop 30284477
Temperature Calibration Kit 11113857
Anti-Theft Device 80850043
Aluminum Pan (set of 80) 80850086
Glass Fiber Pads (set of 200) 80850087
Cage, Sample 80252477
Reusable Pan Set of 3, 7mm High 80252478
Reusable Pan Set of 3, 14mm High 80252479
SF40A Impact Printer 30064203

Outline Dimensions

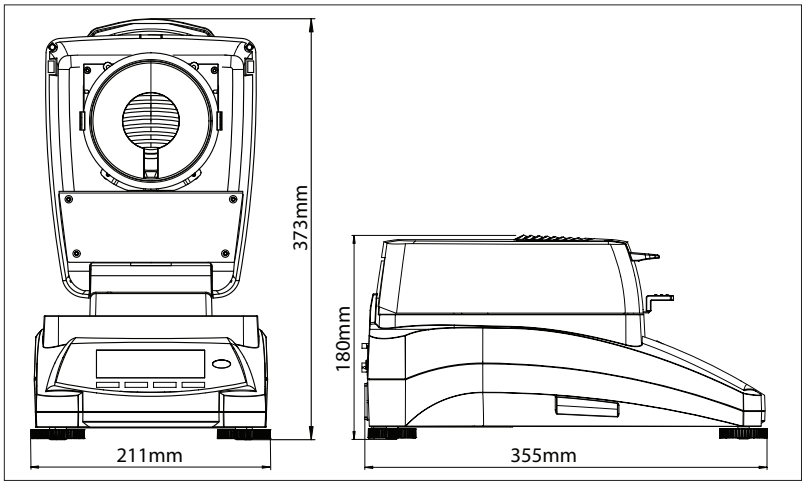

OHAUS CORPORATION
*7 Campus Drive
Suite 310
Parsippany, NJ 07054 USA

Tel: 800.672.7722
973.377.9000
Fax: 973.944.7177

www.ohaus.com

With offices throughout Europe, Asia and Latin America

***ISO 9001:2008**
Registered Quality Management System

80775052 © Copyright OHAUS Corporation